SISTEMA HETERODINO CROSS

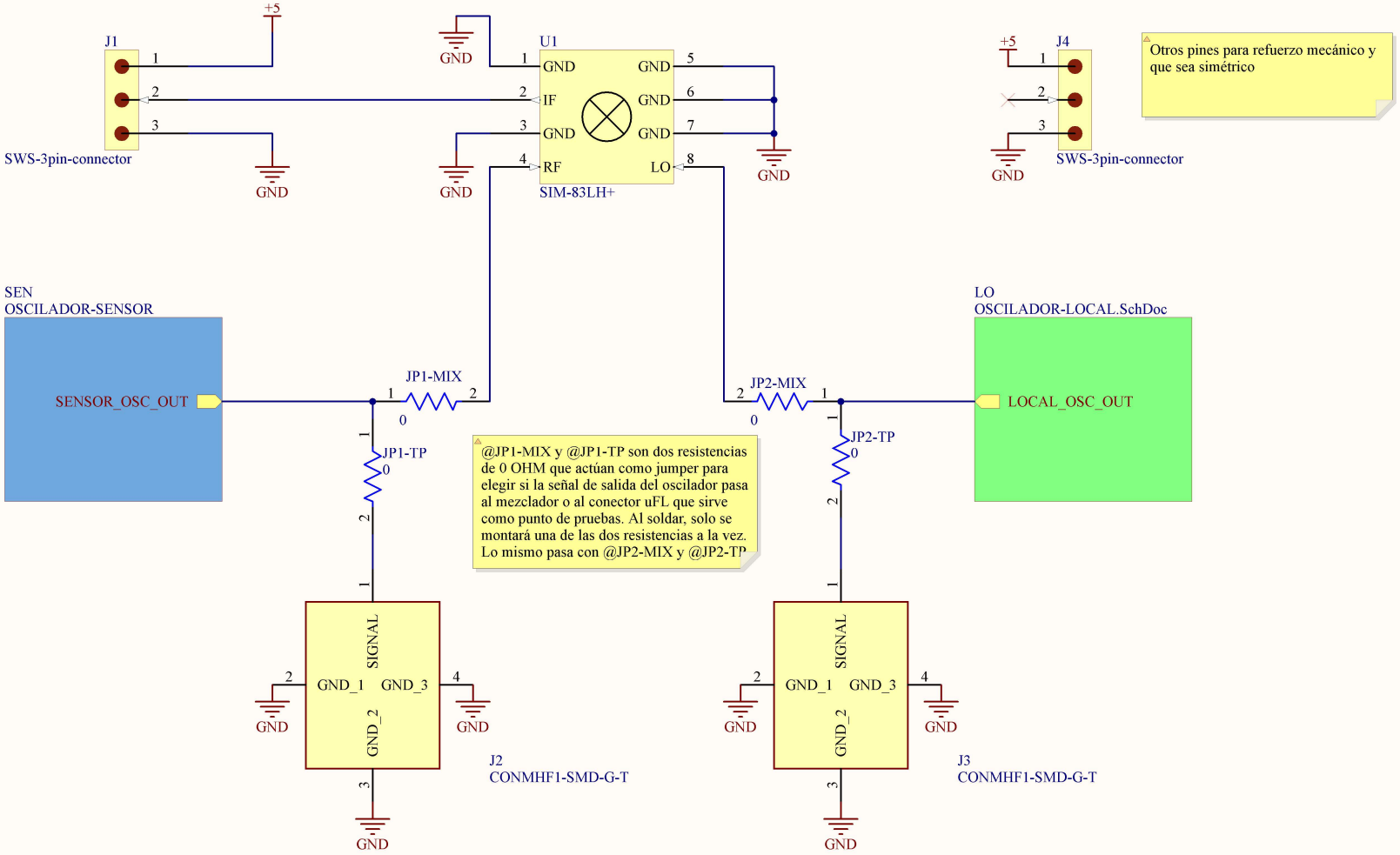

Title: *SOE - Sistema heterodino*		**Author:** Mario de Miguel	*
Size: A4	**Prj:** SWSH-Cross	**Approved:** *	*
		CERN-OHL-S-2.0	*
Date: 25/03/2026 10:31:35	Sheet 1 of 3	**Edited:** 25/03/2026	*
Git Hash: Not in version control		**Variant:** [No Variations]	*
		SW Version: 25.3.3.18	*
File: C:\Users\worbb\Desktop\2024-IMA\PCB\Altium\SWS_Heterodyne\PRINCIPAL.SchDoc			

OSCILADOR SENSOR

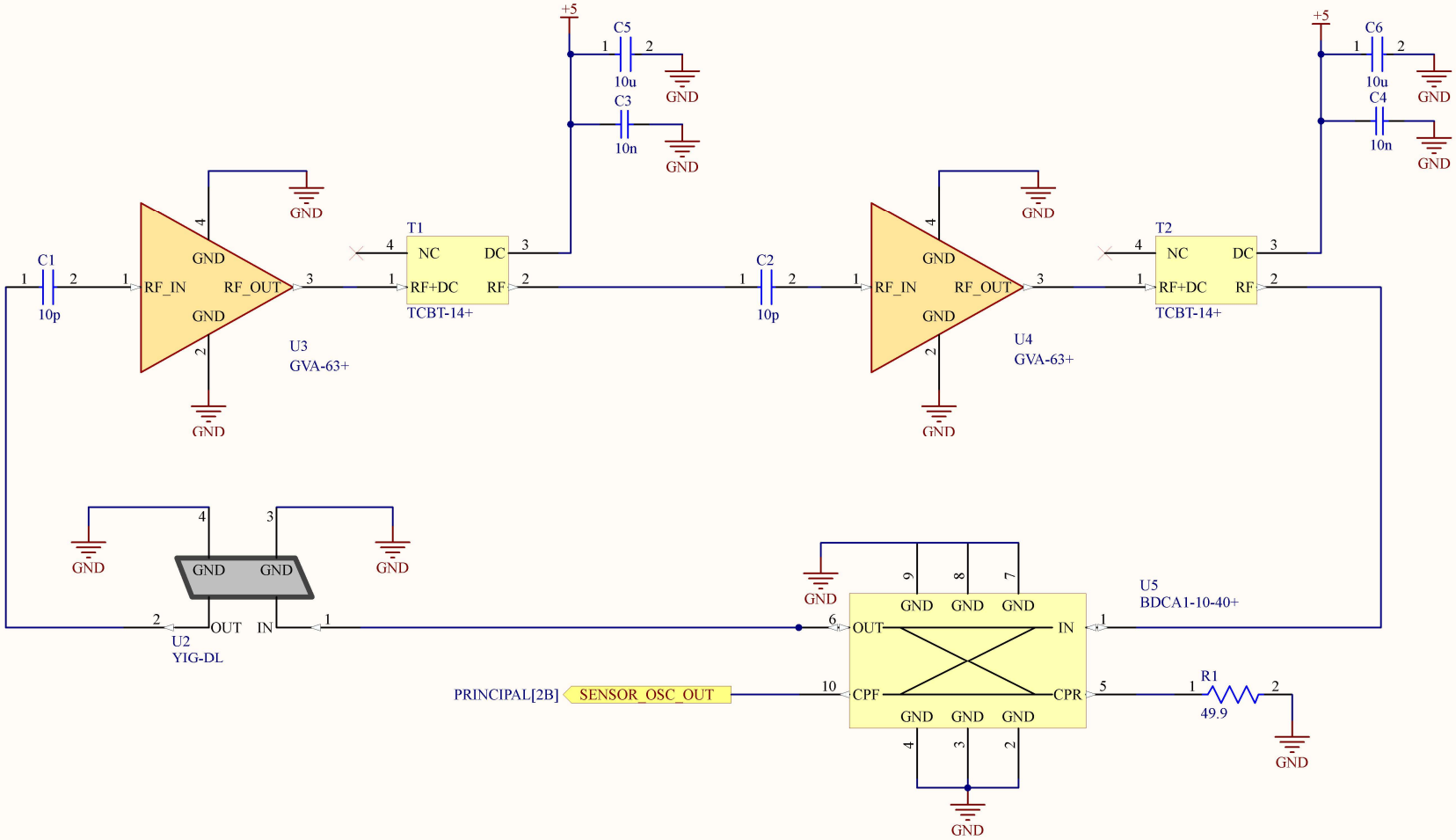

Title: *Oscilador de YIG sensor*		**Author:** Mario de Miguel	*
Size: A4	**Prj:** SWSH-Cross	**Approved:** *	*
		CERN-OHL-S-2.0	*
Date: 25/03/2026 10:31:35	Sheet 2 of 3	**Edited:** 25/03/2026	*
Git Hash: Not in version control		**Variant:** [No Variations]	*
		SW Version: 25.3.3.18	
File: C:\Users\worbb\Desktop\2024-IMA\PCB\Altium\SWS_Heterodyne\OSCILADOR-SENSOR.SchDoc			

OSCILADOR LOCAL

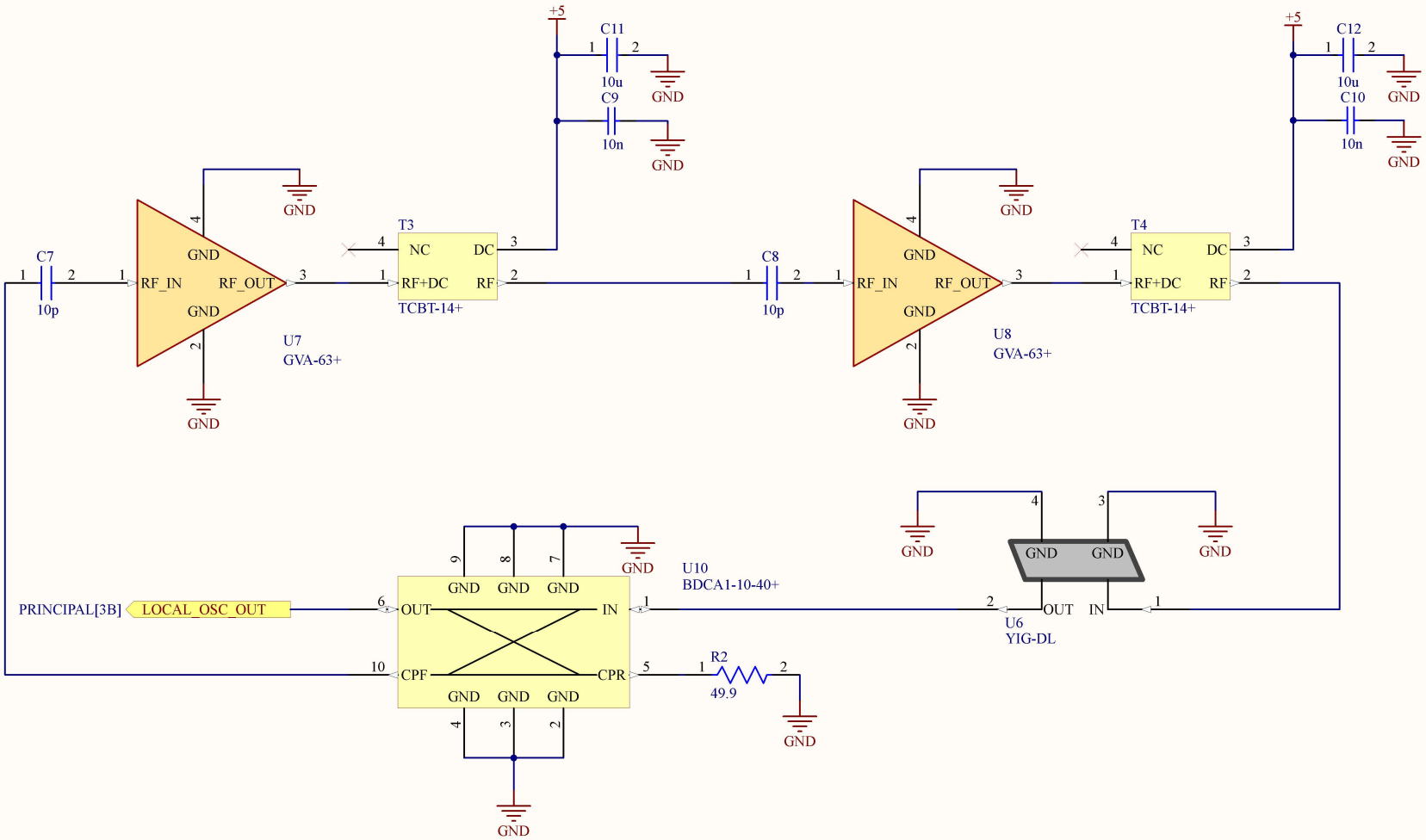

Title: *Oscilador de YIG referencia*		Author: Mario de Miguel	*
Size: A4	Prj: SWSH-Cross	Approved: *	*
		CERN-OHL-S-2.0	*
Date: 25/03/2026 10:31:35	Sheet 3 of 3	Edited: 25/03/2026	*
Git Hash: Not in version control		Variant: [No Variations]	*
		SW Version: 25.3.3.18	
File: C:\Users\worbb\Desktop\2024-IMA\PCB\Altium\SWS_Heterodyne\OSCILADOR-LOCAL.SchDoc			